MODEL: **BaSix BSX-400i-KVS**

BASIX

BaSix 400i Hand Wash Station with 'Push-Front', Hands-Free mechanical operation. Includes fixed spout, M-MX91 manual mixer, water hose & tap hole stopper

Accreditation: WRAS
Basin Range: BSX-400i
Controls: Hands-Free
Controls: Hands-free 'Push Front'
Spout: Fixed Spout

FEATURES & BENEFITS

- WRAS approved across the whole range.
- Curved design ideal for commercial kitchens.
- No sharp corners for kitchen staff to knock into.
- Easy to clean integral flush grated waste reduces the risk of bacterial development.
- Auto shut-off valve drastically reducing water usage
- Bowl and deck are permanently bonded to the skirt removing the need for exposed bolts and rivets.
- High strength injection moulded skirt removes the possibility of cut hazards created by sharp stainless steel edge.
- Mounting bracket with integral spirit level for fast and easy installation.
- Optional waste bins can be fitted to all models.
- Stylish, functional design.

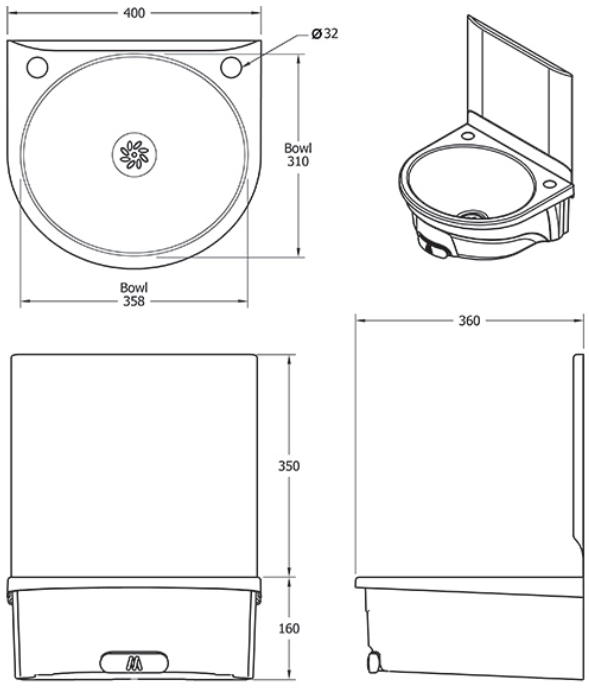

Dimensions are in millimeters. If a Cad file is required please visit www.mechline.com.

MECHLINE

MECHLINE DEVELOPMENTS LIMITED
Tel: +44 (0)1908 261511 | Email: info@mechline.com | Web: www.mechline.com

©2019 All rights reserved. All material on these pages, including and without limitation text, logos, icons, photographs and all other artwork, is copyright material of Mechline Developments Ltd, unless otherwise stated. Commercial use of this material may only be made with the express, prior, written permission of Mechline. This includes material provided by any third party, including material obtained through links to other sites from Mechline's pages or its af liates and commercial associates. Material and information included are correct at time of print. Intending buyers and users must satisfy themselves as to the suitability and safety of the products for their particular purposes and duties. Dimensions shown in mm unless otherwise stated. Product accreditation may not apply to all products in the relevant range. Please contact Mechline to con rm. Unless otherwise stated, all products carry a warranty of twelve (12) months against manufacturing defect or workmanship on parts with no inclusion for labour or site attendance.