Datasheet

iCombi® Pro 10-full size E/G

Capacity

>Ten (10) Full-size sheet pans or Twenty (20) Steam table pans or Ten (10) 2/1 GN accessories
>Removable standard hinging rack with 2 5/8 inch rack spacing (68 mm)
>Large selection of accessories for various cooking procedures, such as grilling, braising or baking
>For use with 2/1, 1/1, 2/4 GN accessories

Combi-steamer mode

>Steaming 86 °F - 266 °F
>Convection 86 °F – 572 °F
>Combination of steam and convection 86 °F – 572 °F

Description

Intelligent, connectable cooking system with the operating modes poultry, meat, fish, egg dishes/desserts, side dishes/vegetables, baked goods and finishing as well as the cooking methods roasting, cooking, baking and grilling.
>Combi steamer as per DIN 18866 (in manual mode).
>For most cooking processes used in commercial kitchens.
>For using steam and convection, individually, one after the other, or combined.
Ventilation approvals: The electrical appliance conforms to the EPA 202 test in accordance with ANSI/NFPA 96 "Ventilation Control and Fire Protection of Commercial Cooking Operations" Refer to UL Listing KNLZ.E148536 (America) or KNLZ7.E148536 (Canada).
The following intelligent assistants are available:

Intelligent assistant

iDensityControl iProductionManager iCookingSuite iCareSystem

iDensityControl

iDensityControl is the iCombi Pro's intelligent climate management. The interaction among intelligent sensors, a high-performance heating system and fresh steam generator, and active dehumidification ensures that the right cooking cabinet climate is always available. Intelligent air circulation ensures the best possible energy input into the food. Consequently, this ensures extraordinary productivity while maintaining high levels of food quality, even cooking and minimum energy consumption.

iCookingSuite

The iCookingSuite is the iCombi Pro's cooking intelligence. The user starts by selecting the right cooking path for the food, choosing from among 6 operating modes and / or 5 cooking methods. Users also specify the desired cooking result. The unit suggests settings for browning and degree of doneness. Intelligent sensors detect the size, quantity and condition of the food. While the cooking path is in progress, the system adjusts key parameters like cooking cabinet temperature, airspeed, and cooking time accurately to the second. The selected desired results are achieved, yielding the best possible quality in the shortest possible time. It is possible to optionally influence the cooking sequence and adapt the cooking result. Users can change to iProductionManager or manual mode at any time. Thanks to iCookingSuite you can simply save time, raw materials, and energy while maintaining a standardized food quality without having to check the procedure.

iProductionManager

iProductionManager intelligently and flexibly organizes the production process. This includes which products can be prepared together on different trays, the ideal sequence of dishes, and monitoring the cooking sequence. iProductionManager supports users with prompts to load or unload dishes. Depending on kitchen processes you can freely position orders (up to two per level) or schedule them on the basis of a certain target time. iProductionManager arranges the sequence of dishes accordingly and automatically specifies the correct settings. Users decide whether dishes are cooked based on optimum energy consumption or a certain target time. Simple monitoring activities are no longer required, saving you working time and energy.

iCareSystem

The iCareSystem is the intelligent iCombi Pro cleaning and descaling system. It recommends the amount of chemicals and ideal cleaning stage from the nine available programs based on usage and any limescale in the steam generator. Ultra-fast interim cleaning cleans iCombi Pro in only 12 minutes, all cleaning programs can also run overnight without the need for supervision. The

iCareSystem is particularly efficient and environmentally friendly, consuming small quantities of phosphate-free care products, water, and energy. This means that the iCombi Pro is always hygienically clean without manual work and at minimal costs.

Distributed by:

HKR EQUIPMENT CORPORATION
FOODSERVICE EQUIPMENT, SERVICE, PARTS, ACCESSORIES, & CONSUMABLES

+632 8858 8688
sales@hkr.com.ph
9705 Kamagong St.,
San Antonio Village, Makati City
/hkrequipmentcorp
/hkrequipmentcorp.ph
www.hkr.com.ph

Datenblatt, Version 13 - 8/12/2020 8:51 AM - We reserve the right to make technical changes.

Unit description and functions

Intelligent functions

>Intelligent climate management that measures, adjusts and controls the humidity down to the exact percentage
>The actual measured humidity in the cooking cabinet can be adjusted and viewed
>Dynamic air turbulence in the cooking cabinet thanks to two intelligent, reversible, high-performance fan wheels with five fan wheel speeds, intelligently actuated and manually programmable
>Intelligent cooking path regulation and automatic adjustment of cooking steps in order to achieve the target results, e.g., browning and degree of doneness, safely and efficiently - regardless of product size, load quantity, or who is using the unit
>Monitoring accurate to the second and calculation of browning on the basis of the Maillard reaction to reproduce ideal cooking results
>Adjust intelligent cooking methods or switch between iCookingSuite and iProductionManager for maximum flexibility
>Intelligent cooking step to proof baked goods
>Individual, intuitive programming of up to 1,200 cooking programs with up to 12 steps using drag-and-drop.
>Easy transfer of cooking programs to other cooking systems through secure cloud connection with ConnectedCooking or via USB stick
>iProductionManager, the automated, intelligent planning and controlling tool, organizes multiple cooking processes and mixed loads perfectly. Automatic closing of planning gaps. Automatically optimize schedules and energy consumption in planning and target time preparation to start or end cooking dishes at the same time.
>Visual indication of loading and removal requests using energy-saving LED lighting
>Automatically resumes and optimally completes cooking processes following power outages lasting less than 15 minutes
>Intelligent cleaning system suggests cleaning programs and the required amount of care products based on the degree of soiling within the cooking system
>Display of the current cleaning and descaling status
>Condensation/exhaust air hoods (accessories) with situational adjustment of the extraction performance and transfer of service messages.

Cooking functions

>High-performance steam generator for optimal steaming performance even at low temperatures below 212°F
>Power-steam function: increased steaming power available for Asian applications
>Integrated, maintenance-free grease separation system without an additional grease filter
>Cool-down function to quickly cool down the cooking cabinet; additional fast cooling using internal water nozzle
>Core temperature probe with six measuring points and automatic error correction in the event of incorrect positioning. Optional positioning tool for soft or very small cooking products (accessory)
>Delta-T cooking for extremely gentle preparation with minimal cooking losses
>Precise burst-steam injection; water quantities can be set to 4 different levels within a temperature range of 85°F – 500°F for convection or steam-convection combination modes
>Digital temperature display, can be set to °C or °F, displays target and actual values
>Cooking cabinet humidity and time displayed digitally; displays target and actual values
>Time can be set to display in 12- or 24-hour format
>24-hour real-time clock with automatic adjustment for daylight savings time when connected to ConnectedCooking
>Automatic pre-selected starting time with variable date and time
>Integrated hand shower with automatic retraction and switchable spray/jet function
>Energy-saving, long-lasting LED lighting in the cooking cabinet, with excellent color fidelity to allow quick determination of cooking progress
>No-charge 4-hour RATIONAL certified chef assistance program

Occupational and operating safety

>Electronic safety temperature limiter for steam generator and convection heating
>Integrated fan wheel brake
>Contact temperature of the cooking cabinet door max. 163 °F
>Use of Active Green cleaning tabs and Care tabs (solid cleaning agent) for ideal occupational safety levels
>HACCP data storage and output via USB or optional storage and management in the cloud-based networking solution ConnectedCooking
>Tested according to national and international standards for unsupervised operation
>Maximum tray height must not exceed 63 inch when using a RATIONAL stand
>Ergonomic door handle with right- / left-handed door opening and swing-shut function

Networking

>Integrated, IP-protected Ethernet interface for wired connection to the cloud-based ConnectedCooking networking solution
>Integrated Wi-Fi interface for wireless connection to the cloud-based networking solution ConnectedCooking
>Integrated USB interface for local data exchange
>Cloud-based ConnectedCooking solution allows central unit management; recipe, shopping cart and program management; HACCP data management; maintenance management

Cleaning and care

>Automatic, water pressure-independent cleaning and maintenance system for cooking cabinet and steam generator
>Nine cleaning programs for unsupervised cleaning, also overnight, with automatic cleaning and removal of limescale deposits within the steam generator
>Ultrafast cleaning in only 12 minutes for practically uninterrupted, hygienic production
>Automatic cleaning routine following power outages, ensuring that cooking cabinet remains free of cleaning agents even after the cleaning process has been canceled
>Use of phosphate and phosphorus-free Active-Green cleaning agent tabs and Care tabs
>Hygienic setup that is flush with the counter without feet for simple, safe cleaning

Datenblatt, Version 13 - 8/12/2020 8:51 AM - We reserve the right to make technical changes.

>Triple glass pane cooking cabinet door with rear ventilation, thermally reflecting special coating and swiveling glass panes for easy cleaning
>Inside and outside material: stainless steel DIN 1.4301 / ASTM 304, seamless hygienic cooking cabinet with rounded corners and optimized air flow
>Glass and stainless steel surfaces allow easy, safe external cleaning; IPX5-class protection against spraying water in all directions
>Monitoring option for automatic cleaning using the cloud-based ConnectedCooking networking solution

Operation

>High-resolution 10.1 inch TFT color display and capacitative touchscreen with self-explanatory icons for simple, intuitive operation with gestures like swiping and dragging
>Acoustic prompts and visual messages when user action is required
>Central dial with Push function for intuitive selection and confirmation of entries
>User interface and help function can be set to over 55 languages
>Basic national cuisine preferences can be selected regardless of language settings. Possible to select additional, local cuisine
>Specially adapted cooking parameters for international or country-specific dishes can be selected and started regardless of unit language settings
>Extensive search function including all cooking paths, application examples and settings
>Context-sensitive support that always shows the current help content for the displayed screen content
>Start application examples from help file
>Simple selection of cooking paths using six operating modes and/or five cooking methods
>Cockpit function to display information about the processes within a cooking path
>Customization and control of user profiles to prevent operator errors
>Interactive notifications regarding cooking paths, requested actions, intelligent functions and warnings thanks to Messenger

Installation, maintenance and environment

>Professional installation by RATIONAL-certified technicians recommended
>Fixed waste water connection conforming to SVGW requirements is permitted
>Adaptation to the installation site (height above sea level) through automatic calibration
>Operation without water softener and without additional manual descaling possible
>Installation flush with the floor and wall through connection in the base area *
>Service diagnostic system with automatic service message display, self-test function for active testing of unit functions
>Remote diagnosis via ConnectedCooking by certified RATIONAL service partners
>2-year RATIONAL warranty including parts, labor, and travel and 5-year steam generator warranty**
>Regular maintenance is recommended. Servicing by RATIONAL service partner according to manufacturer recommendations
>Energy efficiency in accordance with ENERGY STAR tested and passed. Published at www.energystar.gov
* See the installation or planner manual for details
** Terms and conditions apply, see manufacturer warranty statement at www.rational-online.com

Options

>Cooking cabinet door, left-hinged
>MarineLine - marine version
>SecurityLine – prison / security version
>MobilityLine – mobile variant
>HeavyDutyLine – particularly heavy-duty version
>Integrated fat drain
>Mobile oven rack package
>Protection for control panel
>Safety door lock
>Lockable control panel

Distributed by:
HKR EQUIPMENT CORPORATION
FOODSERVICE EQUIPMENT, SERVICE, PARTS, ACCESSORIES, & CONSUMABLES
+632 8858 8688
sales@hkr.com.ph
9705 Kamagong St.,
San Antonio Village, Makati City
/hkrequipmentcorp
/hkrequipmentcorp.ph
www.hkr.com.ph

Datenblatt, Version 13 - 8/12/2020 8:51 AM - We reserve the right to make technical changes.

Technical specifications

Dimensions and weights

Dimensions (W x H x D)	
Cooking system (body) Cooking	42 1/4 x 39 7/8 x 38 3/8 inches
system (total). Cooking system with	42 1/4 x 41 7/8 x 41 inches
packaging Maximum working height of	46 1/4 x 49 1/4 x 45 1/2 inches
top level*	≤ 5 ft. 2 7/8 inches

*when using a corresponding RATIONAL stand

Weights	
56 lb 198 lb Weight - electric unit without	
Maximum load size per level	
packaging total load capacity	
Weight - electric unit with packaging	454 lb
Weight - gas unit without packaging	423 lb
Weight - gas unit with packaging	482 lb

Electrical connection conditions

Voltage 3 AC 208 V /240V	
Connected loads - electric	37.4 kW
Steam power	36 kW
Convection power	36 kW
Breaker	125 A
Connection impedance	0.09 Ω
RCD type	B
Cable diameter	AWG 2 194°F
Voltage 3 AC 440 V / 480 V	
Connected loads - electric	37.4 kW 36
Steam power	kW 36 kW 60
Convection power	A 0.09 Ω B
Breaker	AWG 4 140°'F
Connection impedance	
RCD type	
Cable diameter	

Connected loads - gas

Natural gas G20	
Nominal heat load, total	152000 BTU
Nominal heat load, Steam mode	152000 BTU
Nominal heat load, Hot Air mode	152000 BTU 6.5
Required connection flow pressure	– 10 inch w.c.
Liquid gas	
Nominal heat load, total	148500 BTU
Nominal heat load, Steam mode	148500 BTU
Nominal heat load, Hot Air mode	148500 BTU 10
Required connection flow pressure	– 15 inch w.c.

Additional gas types and voltages available on request

Connected loads - gas

Voltage 2 AC 208 V	
Connected loads - gas	1.5 kW
Breaker	15 A
RCD Type	B

Connection conditions water

Water inlet (pressure hose), each	3/4"
Water pressure (flow pressure), each	14.5-87.0 psi
Water drain, each	2" OD
Maximum flow rate per cooking system	3.17 gal/min

Water quality requirements

Untreated water can be 0 to 24.5 gr/gal (0 to 420ppm) hardness. We do not recommend treated water hardness < 5 gr/gal (86ppm) because the water could be corrosive. Sodium ion exchangers are not recommended; H+ Ion exchange systems are recommended. Water that does not meet the following minimum standards will require the proper conditioning

Contaminant	Water Requirements	If > than recommended
Sand / Particles	< 15 µm	Particle filter
Chlorine (Cl2)	< 0.12 gr/gal (0.2 ppm)	Active carbon filter
Chloride (Cl-)	< 4.68 gr/gal (80 ppm)	RO

Connected loads - exhaust air and thermal load

Latent heat load	6018 BTU
Sensible heat emission	7565 BTU
Sound level (electric)	58 dBA
Sound level (gas)	63 dBA

Connection loads - data

LAN data interface	RJ45
WiFi data interface	IEEE 802.11 a/g/n

Minimum distances at installation

Clearance Requirements

To facilitate servicing, we recommend leaving a 20" (500 mm) gap on the left-hand side of the unit. If there is not 20" (500 mm) left side clearance available, provisions for moving the unit to the left for service access must be made. Such provisions include, but are not limited to, having quick connections (water, gas, etc.) and lengthened electrical connections with flexible cords.

If there are no external heat sources acting on the unit, there should be at least 2" (50 mm) of clearance on either side of the unit. The back of the unit can be mounted flush with the wall.

If a high temperature heat source is on the left side of the unit, clearance of at least 14" (350 mm) must be maintained on the left-hand side. This clearance may be reduced to 2" (50 mm) if a heat shield is used (see accessories).

Recommended clearance from unobstructed rear exhaust pipes and any surface collecting grease or flammable material; 16" (400 mm) gas, 10" (254 mm) electric. It is recommended to have a hood overhang of 6" (150 mm) to 18" (450 mm) at the front of the unit and 6" (150 mm) on the sides if installed at the end of the cooking line. Please refer to the Installation Manual for additional technical data and for instructions on installation and setup.

Terms and conditions of installation

>Observe all local and country-specific standards and regulations regarding the installation and operation of industrial cooking appliances. The local standards and regulations for interior ventilation systems must also be taken into account.

Datenblatt, Version 13 - 8/12/2020 8:51 AM - We reserve the right to make technical changes.

>To use ConnectedCooking, an RJ45 network socket or a WLAN connection option (IEEE 802.11 a/g/n) must be in place on-site. For optimal performance, a data rate of at least 100 MB/s is required.

Approvals

Distributed by:

HKR EQUIPMENT CORPORATION

FOODSERVICE EQUIPMENT, SERVICE, PARTS, ACCESSORIES, & CONSUMABLES

+632 8858 8688

sales@hkr.com.ph

9705 Kamagong St.,
San Antonio Village, Makati City

/hkrequipmentcorp

/hkrequipmentcorp.ph

www.hkr.com.ph

Datenblatt, Version 13 - 8/12/2020 8:51 AM - We reserve the right to make technical changes.

Technical drawing, electrical

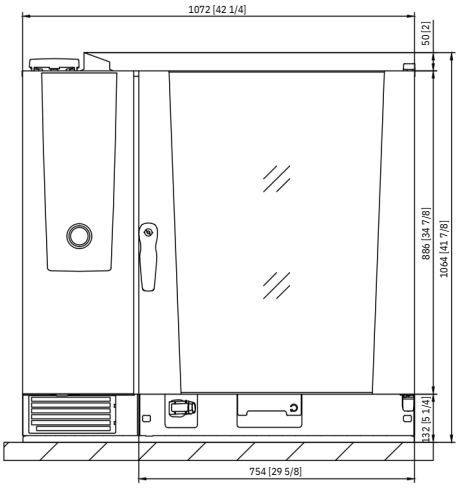

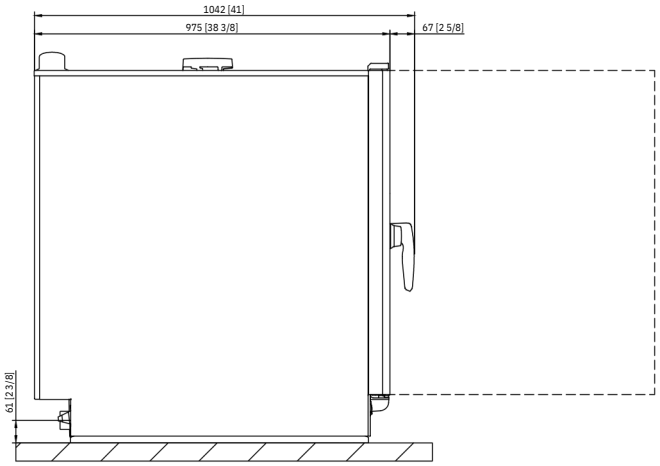

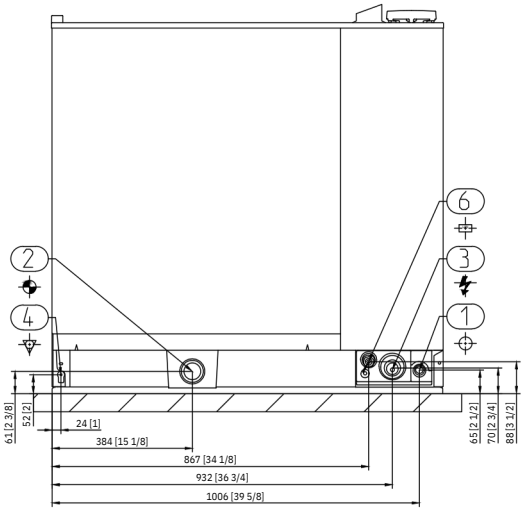

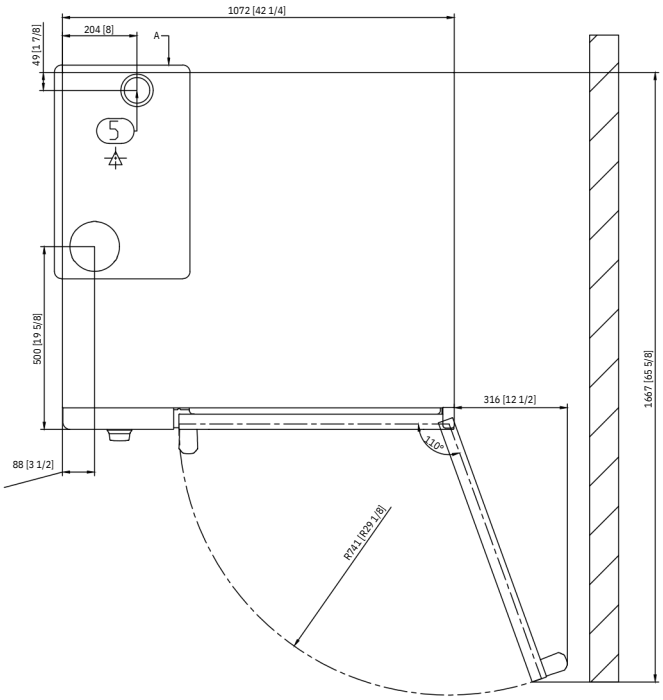

Distributed by:

HKR EQUIPMENT CORPORATION
FOODSERVICE EQUIPMENT, SERVICE, PARTS, ACCESSORIES, & CONSUMABLES

+632 8858 8688
sales@hkr.com.ph
9705 Kamagong St.,
San Antonio Village, Makati City
/hkrequipmentcorp
/hkrequipmentcorp.ph
www.hkr.com.ph

1	Water inlet
2	Water drain
3	Electrical connection
4	Equipotential bonding
5	Ventilation pipe
6	Ethernet interface

Datenblatt, Version 13 - 8/12/2020 8:51 AM - We reserve the right to make technical changes.

Technical drawing, gas

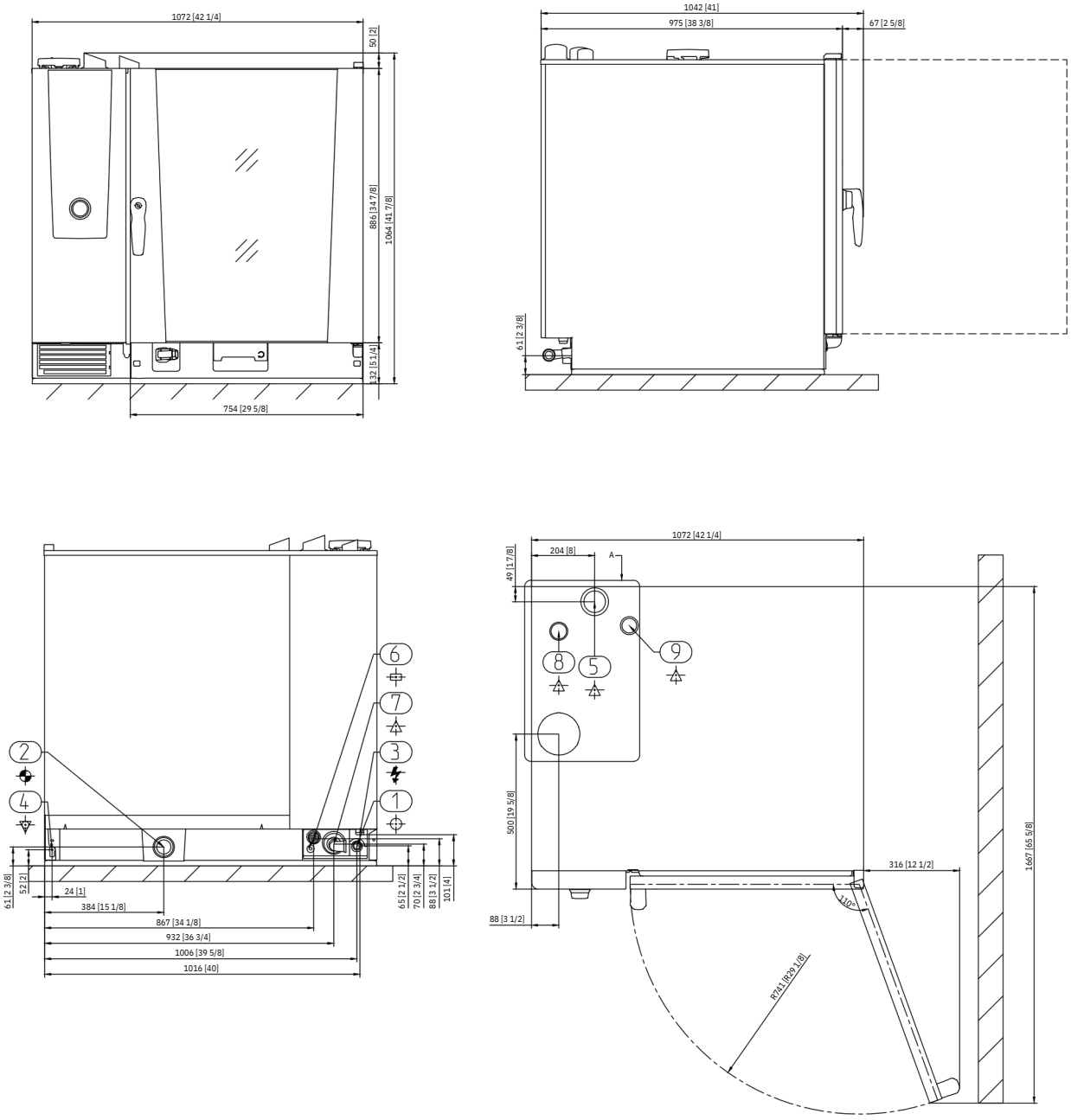

1	Water inlet
2	Water drain
3	Electrical connection
4	Equipotential bonding
5	Ventilation pipe
6	Ethernet interface
7	Gas connection
8	Exhaust pipe gas (steam)
9	Exhaust pipe gas (convection)

Datenblatt, Version 13 - 8/12/2020 8:51 AM - We reserve the right to make technical changes.

Accessories

>5 full size stainless steel grids included with delivery of the cooking system

Accessories RATIONAL Active Green cleaning agent tabs – guarantee the best cleaning performance RATIONAL Care tabs – effectively prevent limescale deposits Stands are available in various versions - standard, with casters, or with anchorable stainless steel feet Condensation breaker – diverts steam and vapors to an existing exhaust air system Sizes 6-half size, 10-half size, 6-full size and 10-full size	**Item number** Item no. 56.01.535 Item no. 56.00.562 See Cooking Systems and Accessories catalog Item no. 60.72.592
RATIONAL USB stick – to securely transfer cooking programs and HACCP data	
Run-in rail for mobile rack and mobile plate rack Size 6-full size, 10-full size	Item no. 42.00.162 Item no. 60.74.650 Item no. 60.12.154 Item no. 60.12.155 Item no. 60.12.156 Item no. left hinged door 60.776 Item no. right hinged door 60.75.774 Item no. 60.31.165
Finishing system for banquets Size 10-full size, 42 plates	
Finishing system for banquets Size 10-full size, 52 plates	
Full size sheet pan adapter	
Heat shield – for installing a unit near a heat source, e.g. a grill - Size 10-full size	
	See Cooking Systems and Accessories catalog
Mobile catering stand - especially for heavy mobile catering usage	Item no. 60.75.605 Item no. 60.73.999 Item no. 60.76.180 Item no. 60.07.178 Item no. 60.74.725 Item no. 1900.1150US
Mobile oven rack and mobile plate oven rack – for simple loading outside the cooking system	
Transport trolley for mobile rack and mobile plate rack - height-adjustable - Sizes 6-full size, 10-full size	
Transport trolley for mobile rack and mobile plate rack - standard - Sizes 6-full size, 10-full size	
UltraVent recirculating hood - for Size 6-full size, 10-full size electric units only	
UltraVent Plus recirculating hood - for Size 6-full size, 10-full size electric units only	
Stackable Combi-Duo kit Size 6-half size E/G on Size 6-half size E or Size 10-half size E	
RATIONAL Double Water Filter - for Combi Duo 6-full size/6-full size and 6-full size/10-full size or if used for more than 2 units	

We offer a wide range of cooking accessories to help you achieve ideal cooking results; for more information, please consult our accessories brochure, ask your dealer, or visit www.rational-online.com

Distributed by:

HKR EQUIPMENT CORPORATION
FOODSERVICE EQUIPMENT, SERVICE, PARTS, ACCESSORIES, & CONSUMABLES

+632 8858 8688
sales@hkr.com.ph
9705 Kamagong St.,
San Antonio Village, Makati City
/hkrequipmentcorp
/hkrequipmentcorp.ph
www.hkr.com.ph

Planner	RATIONAL USA Inc.
	1701 Golf Road, Suite C-120, Commercium Rolling Meadows, IL 60008 Toll Free: 888-320-7274 Fax: 847-755-9583 Email: info@rational-online.com Visit us on the internet: www.rational-online.com

Datenblatt, Version 13 - 8/12/2020 8:51 AM - We reserve the right to make technical changes.